室蘭工業大学
学術資源アーカイブ
Muroran Institute of Technology Academic Resources Archive

The Startle Effect and the Perceived Noisiness of Periodically Intermittent Sounds

メタデータ	言語: English
	出版者: 室蘭工業大学
	公開日: 2014-07-24
	キーワード (Ja):
	キーワード (En):
	作成者: 泉, 清人
	メールアドレス:
	所属:
URL	http://hdl.handle.net/10258/3634

THE STARTLE EFFECT AND THE PERCEIVED NOISINESS OF PERIODICALLY INTERMITTENT SOUNDS

Kiyoto Izumi

Abstract

In Experiment I, the attributive difference of loundness and noisiness was discussed in terms of periodically intermittent sounds. Pink noises of six different patterns of intermittence were judged by the paired comparison method in an acoustically-treated listening room. Between loundness and noisiness responses of the experiment, significant and systematic differences were detected. In Experiment II, the perceived noisiness was investigated by the paired comparison method regarding intermittent pink noises of twenty-five different time-patterns. With the analysis of experiment, the concept of the startle effect is outlined and a perceived noisiness model of periodically intermittent sounds is proposed as a function of three physical parameters ; burst time fraction, repetition rate, and off-time.

INTRODUCTION

A variety of periodically intermittent noises are frequently recorded in industrial area and urban environment today. Along with the traffic noises, they are sometimes designated as the major irritants of our society. The perceived magnitude of these noises, however, cannot satisfactorily be quantified by the so-far establised evaluation methods ; Loundness Level (S. S. Stevens), Perceived Noise Level (K. D. Kryter), Noise Rating Number (I. S. O.), etc.

Concerning the loundness of intermittent noises, Irwin Pollack[1] made his pilot study in 1958, and R. M. Garrett[2] proposed an improved assessment method in 1964. Among several physical parameters contributing to the loundness determination of intermittent noises, they selected the total acoustical energy as the main factor and organized their methods on energy-basis.

The effects of repetition rate, rise-time, burst-to-background ratio, duration of bursts and other physical parameters have been investigated by E. Vigran et al[3]., S. Fidell et al[4]., N. L. Carter[5], B. Gustafsson[6] and others. However, since these researchers have taken different approaches, their achievements cannot easily be organized for the assessment of intermittent sounds.

At the INTER-NOISE 75, the author reported a pilot study, "Two Aspects of the Perceived Noisiness of Intermittent Sounds"[7], and discussed that the perceived noisiness of these sounds should be evaluated by two aspects ; 1) the startle effect of intermittence and 2) the habituation effect, in addition to the widely-acknowledged aspect of total acoustical energy. The author has meantime continued psychoaccoustical experiments on the same theme and obtained more improved data, which resulted in the enlargement and revision of

the INTER-NOISE paper. This paper describes the aspect of the startle effect of intermittence, which shall later be followed by a more detailed description of the habituation effect.

General purpose of this study is to clarify the nature of the perceived noisiness of intermittent sounds so as to establish an efficient assessment method of these sounds. In order to approach this goal, the author first discusses whether loundness and noisiness are same or different. Experiment I of this study is devoted to this problem with a conclusion that loundness and noisiness are different as to periodically intermittent sounds. Now that the differeence is concluded, the author tries to clarify, in Experiment II, the structure of noisiness responses to these sounds. Then, a perceived noisiness model is proposed on the basis of the concept of the startle effect, which is expressed by a function of several physical parameters.

The outline of experiments and related discussions are presented here.

1. FUNDAMENTAL APPROACH TO EXPERIMENTS

The perceived magnitude, either loudness or noisiness, of the steady sounds can now be well assessed by the methods established by predecessors. Therefore, all through the related experiments, the author takes an approach to determine the perceived magnitude of intermittent sounds by means of the comparison with that of continuous sounds.

The experments were conducted in an acoustically-treated listening room. Outside noises were well insulated and the background noise level inside the listening room was always kept at 20 dB(A), NR 28 or below, enough to meet the requirements for these experiments. Interior surfaces of the listening room were covered by glasswool absorbents and the mean reverberation time of 125 to 4,000 Hz was 0.065 sec. Fig. 1 is the schematic diagram of apparatus. Subjects were requested to judge, by the paired comparison method, the perceived magnitude of the intermittent sounds (comparison) and the continuous sounds (stan-

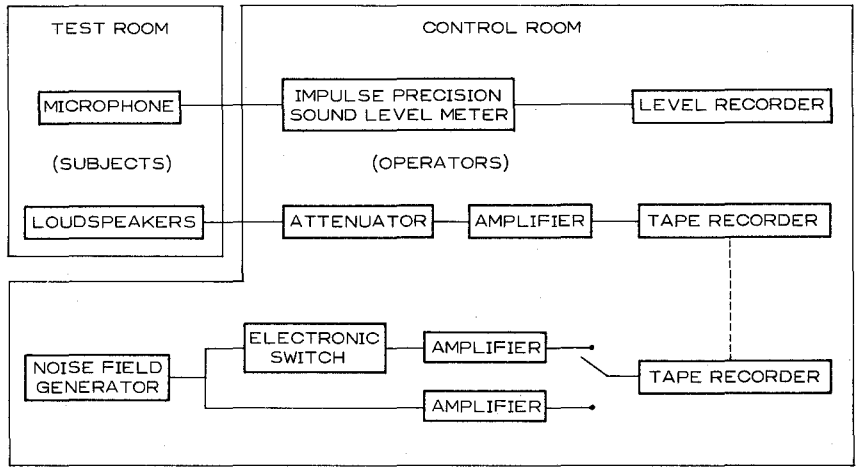

Fig. 1 Schematic Diagram of Apparatus

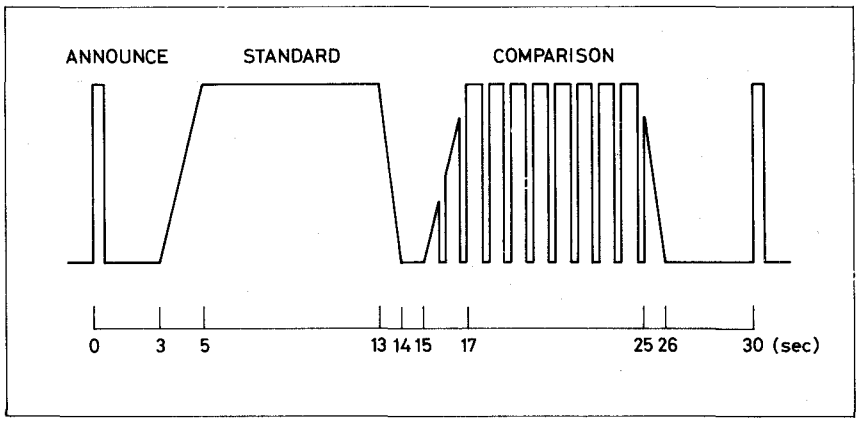

Fig. 2 Diagram of Stimulus Presentation, Paired Comparison Method — Stimuli were presented in Continuous-Intermittent and Intermittent-Continuous sequences and in a fade-in and fade-out manner.

dard). Comparison and standard stimuli were tape-recorded and their levels were manually controlled by operators.

The measurement of peak levels of short bursts is always a difficult problem. Errors of measurement inevitably increase with decredasing rise-time and duration of bursts. Here, the peak levels of intermittent sounds are determined by the meter-indications of a RION NA-57 impulse precision sound level meter. Since this sound level meter meets the specifications of IEC Pub. 179A, the comparison of data and the application of results of these experiments can be made with referring to the IEC specifications.

Fig. 2 is the diagram of stimulus presentation in these experiments. Standard and comparison stimuli were presented to subjects in a fade-in and fade-out sequence. In most experiments within similar categories, the stimuli are presented in an abrupt manner. The author believes that the startle effect at the beginning of the standard stimulus thus presented apt to cause the underestimation of the comparison. After a preliminary experiment, the stimulus presentation as shown in Fig. 2 was selected to eliminate the said effect of the standard.

2. EXPERIMENT I

Background and Purpose

The difference of loundness, noisiness, and annoyance as the attributes to represent the perceived magnitude of noise has long been discussed among researchers. S. S. Stevens seems to have insisted all through his long career that loudness is the only substantial attribute to represent noise, while K. D. Kryter has established the concept of the perceived noisiness distinguished from loudness. B. Scharf[8] discusses that the difference of loudness and noisiness is originated at the decision process within a complex judgemental process leading from stimulus to response. W. Burns[9] states that both loudness and noisiness are the

primary phenomena caused by noise, while annoyance is one of its consequences.

Pearsons and Horonjeff[10] tried to clarify the problem by a rating scale experiment. They found that subjects responded almost in a same manner to loudness, noisiness, annoyance, acceptability and intrusiveness.Kerrick et al[11],. carried out a principal component analysis of their judgement test on musical, real-life and artificial sounds, and found that loudness and noisiness were of the same component. Namba et al.[12] carried out a factor analysis of traffic noise judged by the semantic differential method. Although different adjectives were used in their semantic scales, it could be deduced from their findings that noisiness was not substantially different from loudness. Berglund et al.,[13] however, discovered, in a magnitude estimation experiment, clear distinctions among the responses to loudness, noisiness and annoyance of aircraft noise.

The results of various experiments cited above do not apparently show good accordance. Examining the details of experiments, however, the author deduces that the attributive differences can only be discussed to a satisfactory extent by not generalizing but limiting the discussions to noise events within the same category.

The purpose of Experiment I is to see whether loudness and noisiness are different or not, when restricting the discussions to periodically intermittent sounds. It will be a necessary prerequisite to the understanding of the perceived properties of these sounds.

Procedure

Experiment I comprises two phases. The target attribute of Phase I was loudness and that of Phase II was noisiness. In Japanese language, *Okisa, Yakamashisa* and *Urusasa* are

Table 1. Physical Properties of Stimuli — Experiment I.

Stimuli	Items	Properties
Standard	Type of sound	Continuous pink noise
	Level presented	Constant at 70 dB(A)
Comparison	Type of sound	Periodically intermittent pink noise
	Peak level	12 steps at 2 dB(A) intervals
	Time-pattern*	16/250, 31/250, 63/1.000
		250/1.000, 630/1.000, 950/1.000
	Rise-time	1 msec on tape , ca. 10 msec in field
	Decay-time	1 msec on tape, ca. 40 msec in field
	Burst-to-background ratio	30 dB(A) or over

* on-time/on+off-time in msec.

commonly acknowledged synonyms for loudness, noisiness and annoyance, respectively. The connotations of Japanese synonyms can be considered identical to those of English terms to a high degree. In addition, people usually discriminate *Okisa* from *Yakamashisa*, while they mostly confuse *Yakamashisa* and *Urusasa* ; such might also be the case in English.

A paired comparison method was used in both Phase I and Phase II experiments. The standard stimuli were steady-state pink noises, while the comparisons were periodically intermittent pink noises of six different time-patterns. Temporal properties of the comparisons were as shown in Table 1. The stimuli were presented to subjects by the arrangement as shown in Fig. 1 and Fig. 2. Subjects judged each pair of stimuli four times in total. The instruction to subjects for Phase I included a simple description of *Okisa* as subjective intensity, while that for Phase II included detailed explanations for the judgement of *Yakamashisa.*

Seven college students were used as the subjects. All of them were well trained for psychoacoustical experiments and their defectless hearings were confirmed by the standard audiometric test. No subject was used more than 30 minutes in total per day.

Results

Experiments in two phases were completed and the relative burst levels were calculated as (the level of continuous sound - the level of intermittent sound with equal perceived magnitude) from the responses by each subject. In Table 2 are entered the mean relative burst levels of all subjects and the standard deviations of them according to six intermittent patterns. The standard deviation of loudness data ranges between 0.4 and 1.4 dB(A) and that of noisiness data ranges between 0.8 and 1.7 dB(A). As often reported, loudness data show a better concentration than noisiness data. The narrowness of the ranges is also worth mentioning.

Table 2. Results of Experiment I — Means and standard deviations of the relative burst leves in dB(A), judged by 7 subjects as to *Okisa* (loudness) and *Yakamashisa* (noisiness).

Time-pattern	Mean		S. D.	
	Okisa	*Yakamashisa*	*Okisa*	*Yakamashisa*
16/250	5.9	8.5	1.4	0.9
31/500	4.1	5.9	1.4	1.3
63/1.000	2.0	2.9	0.9	1.7
250/1.000	2.9	7.0	0.4	1.1
630/1.000	3.3	8.2	0.9	0.8
950/1.000	2.9	5.1	1.3	1.5

Discussion

Fig. 3 presents the results of Experiment I so as to facilitate a visual comparison of loudness and noisiness judgements. A glimpse of the graph makes us believe that loudmess and noisiness data are significantly different. Analysis of variance was used to investigate this attributive difference. The summary of analysis is presented in Table 3. Among six patterns of periodically intermittent noises, five reveal a highly significant difference by 1% level between loudness and noisiness judgements and a remaining pattern reveals a significant difference by 5% level.

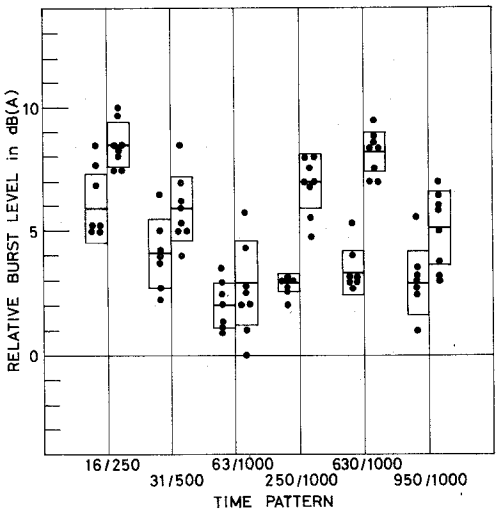

Fig. 3 Results of Experiment I — *Okisa* (loudness) data and *Yakamashisa* (noisiness) data are comparatively plotted. Filled circles represent mean relative burst levels judged by each subject. Averages and standard deviations of them are shown by central lines and rectangles on both sides.

In Fig. 4 and Fig. 5, the mean relative burst levels by loudness judgements and those by noisiness judgements are plotted with burst time fraction (BTF) and repetition rate (RR) on abscissae. Systematic deviations from loudness data to noisiness data are apparently observed. As shall be discussed in the following chapter, the perceived noisiness of periodically intermittent sounds can be systematically expressed by a function of several physical parameters. The loudness data, however, are seen less prominent than noisiness data in a systematic manner. The author holds the view that these differences are brought about by

Table 3. Summary of Analysis of Variance — *Okisa* (loudness) vs. *Yakamashisa* (noisiness) of periodically intermittent sounds.

Time-pattern	Sb	dfb	MSb	Sw	dfw	MSw	F	Prob.
16/250	99.38	1	99.38	60.89	12	5.07	19.58	* *
31/500	50.54	1	50.54	39.88	12	3.32	15.21	* *
63/1.000	11.52	1	11.52	23.21	12	1.93	5.96	*
250/1.000	91.55	1	91.55	21.07	12	1.76	52.13	* *
630/1.000	144.64	1	144.64	22.81	12	1.90	76.09	* *
950/1.000	36.16	1	36.16	28.49	12	2.37	15.23	* *

* * significant by 1% level
* significant by 5% level

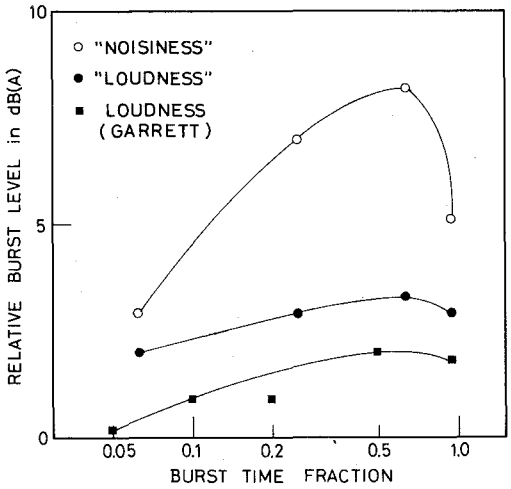

Fig. 4 Comparison of Loudness and Noisiness (1) — *Okisa* (loudness) and *Yakamashisa* (noisiness) data are plotted with loudness data by Garrett for comparison. Repetition rate is 1.0 for all data plotted here.

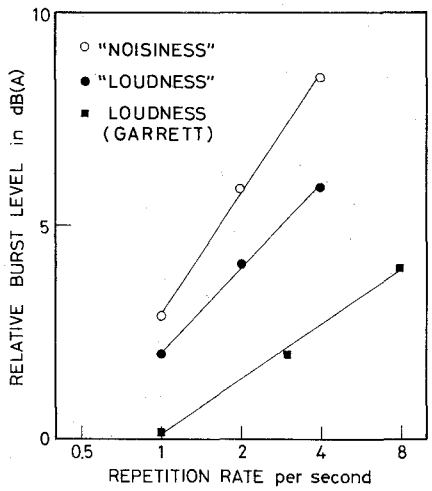

Fig. 5 Comparison of Loudness and Noisiness (2) — *Okisa, Yakamashisa*, and Garrett's loudness data in BTF 0.063.

the difference of contribution of the startle effect of intermittence to loudness and noisiness. More experiments, however, are necessary for full discussion and quantification of these differences.

Summarizing the discussions above, we can conclude that, as far as periodically intermittent sounds are concerned, loudness judgements and noisiness judgements are significantly and systematically different, and so, loudness and noisiness shall be considered as different attributes as to these sounds.

In Fig. 4 and Fig. 5, loudness data by R. M. Garrett are also plotted for comparison. Loudness data of this study and Garrett's data do not show a complete accordance. The difference, however, should be deemed insubstantial when the attention is paid to considerable differences of experimental procedures of these two studies.

3. EXPERIMENT II

Purpose

As aforementioned, the loudness of periodically intermittent sounds was investigated by I. Pollack and R. M. Garrett and the assessment of these sounds in terms of loudness can be made according to their methods. As seen in Experiment I, however, loudness and noisiness of these sounds are significantly different. The purpose of Experiment II, therefore, is to clarify the nature of noisiness responses to these sounds in order to establish an effective assessment method.

At the INTER-NOISE 75, the author presented a perceived noisiness model of perio-

dically intermittent sounds. The experiments supported this model were not sufficient, and so, effective improvements have been tried here in order to realize the pursose of the experiment. Improvements were made in ; 1) the method of stimulus presentation, 2) the acoustical properties of test-room and apparatus, 3) the enrichment of time-patterns of stimuli, and 4) the enlargement of the panel of subjects.

Procedure

The experiment was done by the paired comparison method with the steady-state pink noise of 70 dB(A) as the standard and the intermittent pink noises of 25 time-patterns as the comparisons. For each of 25 time-patterns, two sequences of continuous-intermittent and intermittent-continuous were prepared to eliminate constant time error. For both sequences of 25 time-patterns, each subject repeated four times of the paired comparison judgements. Further details of stimuli and their presentation were as described in Table 4. Test-room and its acoustical properties and the schematic diagram of apparatus were as described in the previous chapters. Other details of procedure were just as in Phase II, noisiness experiment, of Experiment I.

The panel of subjects consisted of seven male college students and a female staff, all in their twenties and well trained for psychoacoustical experiments. Their defectless hearings were also confirmed by the standard audiometric test. No subject was used more than 30 minutes in total per day.

Results

Fig. 6 shows the summarized results of this experiment. It shows the relative burst levels as judged by each subject along with the means and the standard deviations of them.

Table 4. Physical Properties of Stimuli — Experiment II.

Stimuli	Items	Properties
Standard	Type of sound	Constant pink noise
	Level presented	Constant at 70 dB(A)
Comparison	Type of sound	Periodically intermittent pink noise
	Peak level	12 steps at 2 dB(A) intervals
	Burst time fraction	0.016 - 0.950
	Repetition rate	1, 2, & 4 cps.
	Time-pattern	25 patterns as shown in Fig. 6
	Rise-time	1 msec on tape, ca, 10 msec in field
	Decay-time	1 msec on tape, ca. 80 msec in field
	Burst-to-background ratio	30 dB(A) or over

Standard deviations and full ranges of judgement data for each time-patterns are satisfactorily small ; the average of standard deviations and that of full ranges are 1.16 dB(A) and 3.40 dB(A), respectively.

In order to clarify the characteristics of perceived noisiness of periodically intermittent

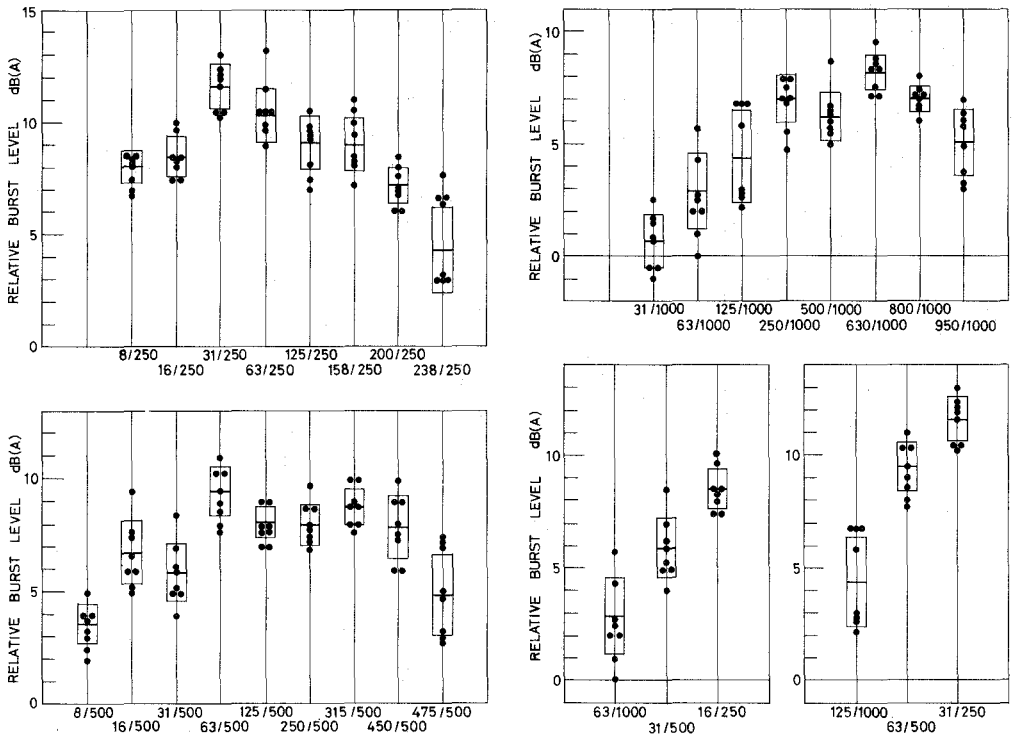

Fig. 6 Results of Experiment II — Filled circles represent mean relative burst levels judged by each subject as to *Yakamashisa* (noiseiness) of intermittent sounds. Averages and standard deviations of them are shown by central lines and rectangles on both sides.

Table 5. Regression Lines and Regression Coefficients

Axis		Regression Line	Regression Coefficient
RR	1	Y = 6.9 logX + 10.9	0.83
	2	Y = 5.7 logX + 14.1	0.78
	4	Y = 6.2 logX + 16.8	0.84
BTF	0.031	Y = 11.7 logX + 1.5	0.88
	0.063	Y = 10.0 logX + 2.6	0.88
	0.125	Y = 11.5 logX + 5.0	0.88

sounds, an isometric presentation was devised as shown in Fig. 7. Relative burst levels in dB(A) are plotted along the ordinate, and burst time fraction and repetition rate are plotted on the first and the second abscissae in logarithmic scales. As clearly seen, the judgement data form a complex surface composed of a flat plane in smaller BTF territory and a curved surface in larger BTF territory.

so as to quantify the plane part, regression lines and regression coefficients were calculated as shown in Table 5. The regression coefficient ranges from 0.78 to 0.88, to show a high correlation between the plane and the judgement data. For the curvilinear part, an exponential decrement by off-time from the above-described regression lines was discovered. All of these relationships were finally summarized as in the following formula ;

$$Lrb = 6 \log_{10}BTF + (10 \log_{10}RR + 10)(1 - e^{-15T_{off}})$$

where Lrb = relative burst level in dB(A)

BTF = burst time fraction, or, on-time/on + off-time

RR = repetition rate per second

T_{off} = off-time in second

The author would like to call this formula as "Perceived Noisiness Model of Periodically Intermittent Sounds 75-A".

Deviations of the judgement data from this model were calculated. The mean error for

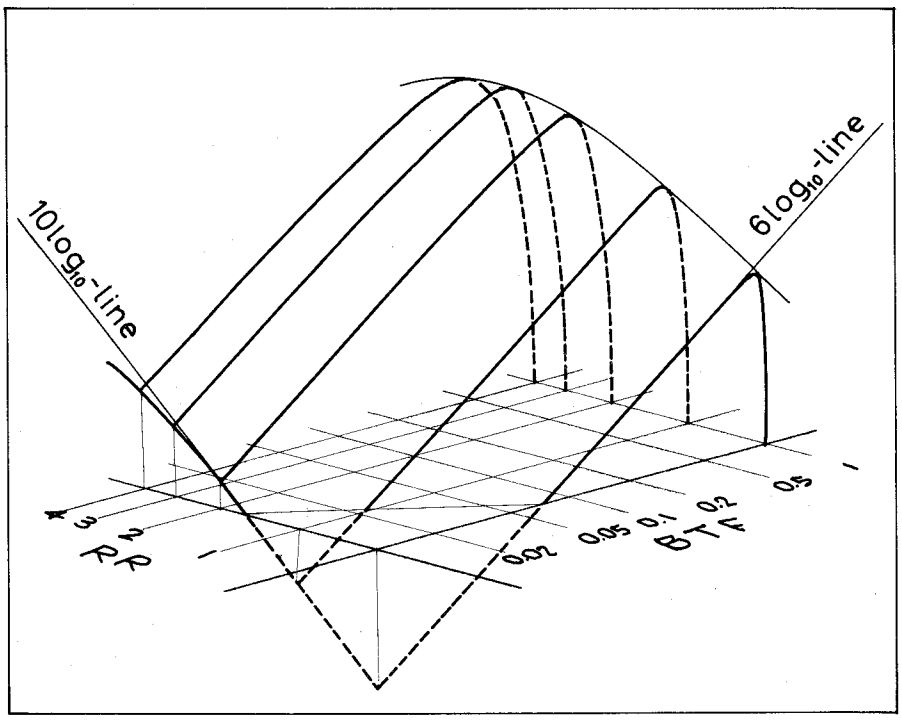

Fig. 7 Isometric Presentation of Relative Burst Levels — Normalized results of Experiment II are laid out with relative burst levels in ordinate, and burst time fraction and repetition rate in abscissae.

each time-pattern ranges from -2.7 to 2.9 dB(A) with the average error of 0.3 dB(A), while the standard deviation of the errors ranges from 0.6 to 2.0 dB(A) with the average of 1.2 dB(A). The result can be considered quite satiscactory.

Discussion

In the previous chapter, a noisiness model of intermittent sounds was presented without much explanation. The author would like to discuss here on the mechanism of responses which substantialized the model as proposed. Discussion shall be made in the following three steps and the outline of discussion is shown in Fig. 8.

1) Energy Effect

It has been frequently pointed out that the perceived magnitude of intermittent noises or repeated pulses can be quantified by the total acoustical energy per unit time. I. Pollack and R. M. Garrett proposed the loudness summation on 10 $\log_{10}$-basis and S. Fidell et al. also insisted the noisiness summation on the same basis. However, their views were all based on the experiments using the stimuli of smaller burst time fractions. Even the published data by Pollack and Garrett revealed considerable deviations from 10 $\log_{10}$-lines in the territory of BTF over 0.01. The author deduced a 6 $\log_{10}$ BTF summation as a fundanental energy effect. Within the extent of this experiment, man does not seem to summate the perceived noisiness of intermittent sounds in a linear manner.

2) Positive Startle Effect

The author believes that the main cause to bring about the difference of loudness and noisiness of intermittent sounds is the different contributions of the startle effect created by intermittence of sound. The startle effect of intermittence is obviously based on the nature of intermittence which is expressed by three physical parameters, namely, repetition rate, rise-time, and burst-to-background ratio.

In this experiment, however, rise-time and burst-to-background ratio were kept constant and repetition rate was treated as the variable. The contribution of repetition rate was quantified and a formula was deduced on 10 $\log_{10}$-basis. Further experiments are necessary to clarify the full extent of this effect, but the present formula can be considered to show the practical maximum of the positive startle effect.

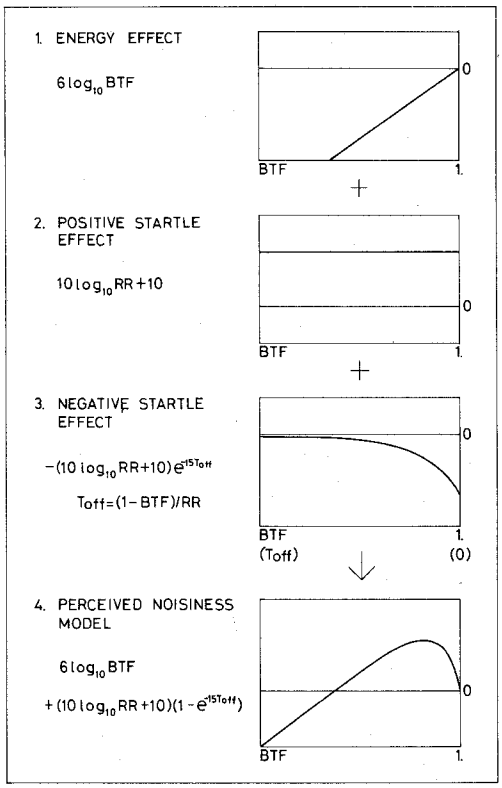

Fig. 8 Concept of Perceived Noisiness Model of Periodically Intermittent Sounds.

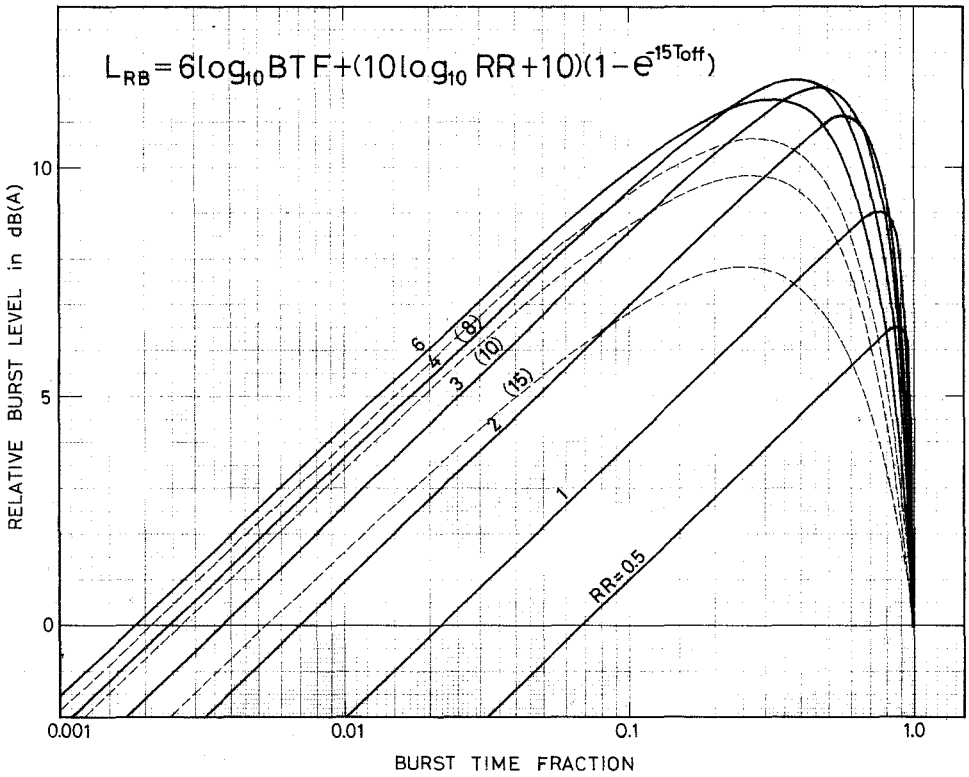

Fig. 9 Perceived Noisiness Model of Periodically Intermittent Sounds 75-A.

3) Negative Startle Effect

As the absolute length of off-time of repeated bursts decreases, the startle effect of a burst of noise in the train is decreased by the psychological residual effect of the burst just prior to it. At the same time, the reverberation of a burst brings about the decrement of burst-to-background ratio of the following burst. Both psychological and physiccl residual effects as described can naturally be explained by the length of off-time (T_{off}). A formula of decrement was thus deduced as shown in Fig. 8 from the results of this experiment.

According to the author, the perceived noisiness of periodically intermittent sounds can be expressed as the final synthesis of the three effects discussed above. The noisiness model presented in the previous chapter is the outcome of the formula thus obtained. Needless to mention, further refinements shall be made to the numerical part of the formula by accumulating theoretical and expermental studies.

Preliminary Validation

Fig. 10 shows the summarized results of a preliminary validation of several assessment methods for the perceived noisiness of intermittent sounds. Predicted values of relative

burst levels for 25 intermittent noises used in Experiment II were calculated by ; 1) Pollack's method, 2) Garrett's method, 3) Peak A : the peak burst level in dB(A), 4) $L_{(a)eq}$: the Equivalent Sound Level in dB(A), 5) NRN : the Noise Rating Number as specified by I. S. O., and 6) the Model 75-A as proposed here. Judgement data of Experiment II were compared to these predicted values and the average errors and their standard deviations were calculated. Seen from these calculations, it is obvious that the Model 75-A is the best predictor among these methods, and that other methods always underestimate the perceived noisiness of intermittent sounds to a considerable extent.

Needless to mention, substantial experiments incorporating a variety of stimuli as well as an enlarged panel of subjects are required for the validation of the method. So the comparison here shall be considered as a preliminary for the proper validation to be carried out.

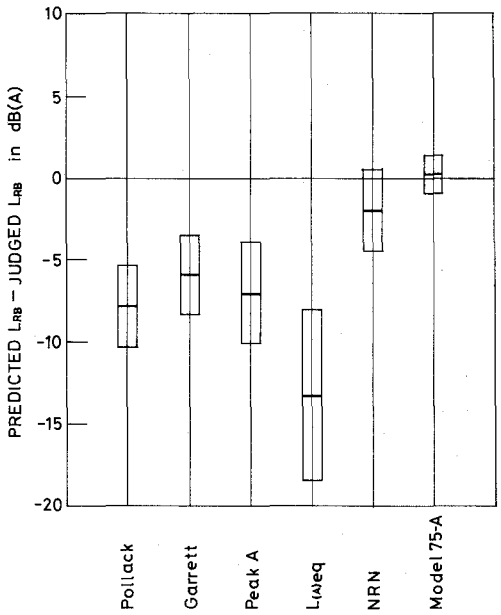

Fig. 10 Preliminary Validation of Assessment Methods—Errors of prediction are calculated as to 25 intermittent noises in Experiment II. Mean errors are shown by central lines with standard deviations by rectangles on both sides.

ACKNOWLEDGEMENTS

Grateful acknowledgement is made here to Professor Goro Horie of Kyoto University for his continued encouragements and many valuable suggestions. The author is grateful to Professor Malcolm J. Crocker for his kind encouragement to prepare this paper. Acknowledgement is also made to Tetsumi Satoh for his assistance in experiments and analyses.

(Received Apr. 22, 1976)

REFERENCES

1. Irwin Pollack, "Loudness of Periodically Interrupted White Noise," *J. Acoust. Soc. Am.*, **30**, 3, 181(1958).
2. R. M. Garrett, "Determination of the Loudness of Repeated Pulses of Noise," *J. Sound Vib.*, **2** (1), 42 (1965).
3. E. Vigran, K. Gjaevenes, and G. Arnesen, "Two Experiments concerning Rise Time and Loudness," *J. Acoust. Soc. Am.*, **36**, 8, 1468 (1964).
4. S. Fidell, K. S. Pearsons, M. Grignetti, and D. M. Green, "The Noisiness of Impulsive Sounds," *J. Acoust. Soc. Am.*, **48**, 6, 1304 (1970).
5. N. L. Carter, "Effect of Repetition Rate on the Loudness of Triangular Transients," *J. Acoust. Soc. Am.*, **37**, 2, 308 (1965).
6. B. Gustafsson, "The Loudness of Transient Sounds as a Function of Some Physical Parameters," *J. Sound*

Vib., **37** (3), 389 (1974).

7. Kiyoto Izumi, "Two Aspects of the Perceived Noisiness of Intermittent Sound," *INTER-NOISE 75 Proceedings*, 453 (1975).
8. Bertram Scharf, "Loudness and Noisiness --- Same or Different?," *INTER-NOISE 74 Proceedings*, 559 (1974).
9. William Burns, *Noise and Man,* William Clowes & Sons, London, 1973, 2nd ed., pp. 115−147.
10. Pearsons and Horonjeff, see K. D. Kryter, *The Effects of Noise on Man,* Academic Press, New York, 1970, p. 274.
11. J. S. Kerrick, D. C. Nagel, and R. L. Bennett, "Multiple Ratings of Sound Stimuli," *J. Acoust. Soc. Am.*, **45**, 4, 1014 (1969).
12. S. Namba, T. Nakamura, S. Kuwano, and T. Kato, "On the Loudness of Traffic Noise," *J. Acoust. Soc. Japan*, **32**, 3, 126 (1976).
13. B. Berglund, U. Berglund, and T. Lindvall, "Scaling Loudness, Noisiness, and Annoyance of Aircraft Noise," *J. Acoust. Soc. Am.*, **57**, 4, 930 (1975).